SOCKETS M8 x 1

CONEC TECHNOLOGY IN CONNECTORS™

Front panel mounting, dip solder termination, shielded
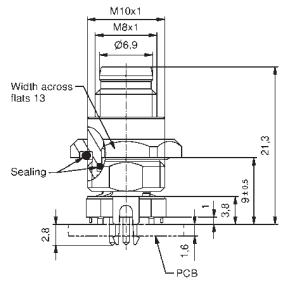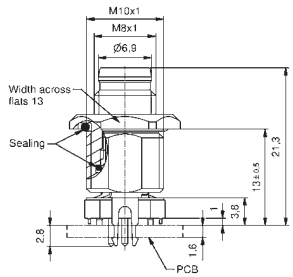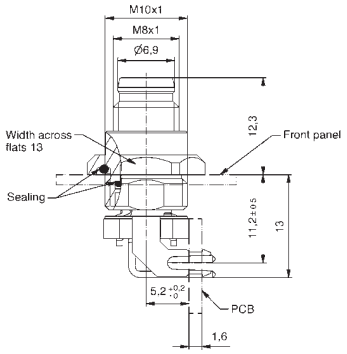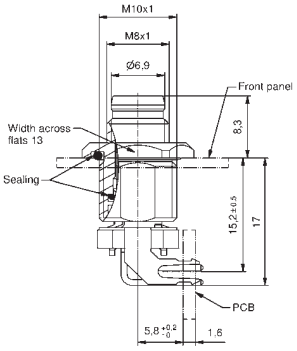
Number of poles	Coding	Rated voltage [V]	Current rating [A]	Installation height [mm]	Description	Part No.
Male connector axial, installation height 9 mm , front panel mounting, dip solder termination, shielded						
3		50 V AC/ 60 V DC	4	9	SAL-8S-FS3-X9	42-01361
4		50 V AC/ 60 V DC	4	9	SAL-8S-FS4-X9	42-01369
Male connector axial, installation height 13 mm , front panel mounting, dip solder termination, shielded						
3		50 V AC/ 60 V DC	4	13	SAL-8S-FS3-X13	42-01362
4		50 V AC/ 60 V DC	4	13	SAL-8S-FS4-X13	42-01370
Male connector angled, installation height 11.2 mm , front panel mounting, dip solder termination, shielded						
3		50 V AC/ 60 V DC	4	11,2	SAL-8S-FSW3-X11	42-01421
4		50 V AC/ 60 V DC	4	11,2	SAL-8S-FSW4-X11	42-01429
Male connector angled, installation height 15.2 mm , front panel mounting, dip solder termination, shielded						
3		50 V AC/ 60 V DC	4	15,2	SAL-8S-FSW3-X15	42-01422
4		50 V AC/ 60 V DC	4	15,2	SAL-8S-FSW4-X15	42-01430