CONEC TECHNOLOGY IN CONNECTORS™

Male connector angled, screwable / snap-in

PVC, grey, LiYY

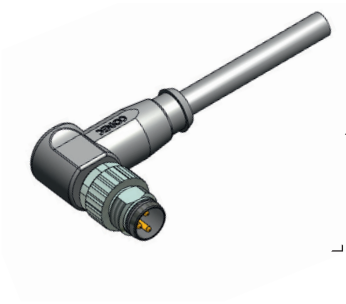

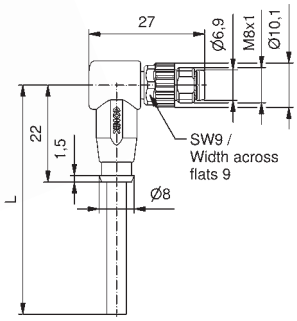

Contact assignment	Number of poles	Coding	Rated voltage [V]	Current rating [A]	Cable length = L [m]	Wire cross section [mm²]	Description	Part No.
Pin 1, Pin 3, Pin 4	3		50 V AC / 60 V DC	3	2	0,25	SAL-8-RSWU3-2 / A1	42-10088
					3		SAL-8-RSWU3-3 / A1	42-10089
					5		SAL-8-RSWU3-5 / A1	42-10090
					10		SAL-8-RSWU3-10 / A1	42-10091
Pin 1, Pin 2, Pin 3, Pin 4	4		50 V AC / 60 V DC	3	2	0,25	SAL-8-RSWU4-2 / A1	42-10120
					3		SAL-8-RSWU4-3 / A1	42-10121
					5		SAL-8-RSWU4-5 / A1	42-10122
					10		SAL-8-RSWU4-10 / A1	42-10123

TPU, UL, halogenfree, black, Li9Y11Y

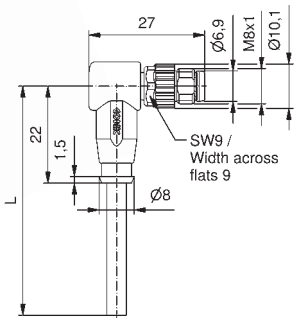

Contact assignment	Number of poles	Coding	Rated voltage [V]	Current rating [A]	Cable length = L [m]	Wire cross section [mm²]	Description	Part No.
Pin 1, Pin 3, Pin 4	3		50 V AC / 60 V DC	3	2	0,25	SAL-8-RSWU3-2 / K1	42-10092
					3		SAL-8-RSWU3-3 / K1	42-10093
					5		SAL-8-RSWU3-5 / K1	42-10094
					10		SAL-8-RSWU3-10 / K1	42-10095
Pin 1, Pin 2, Pin 3, Pin 4	4		50 V AC / 60 V DC	3	2	0,25	SAL-8-RSWU4-2 / K1	42-10124
					3		SAL-8-RSWU4-3 / K1	42-10125
					5		SAL-8-RSWU4-5 / K1	42-10126
					10		SAL-8-RSWU4-10 / K1	42-10127